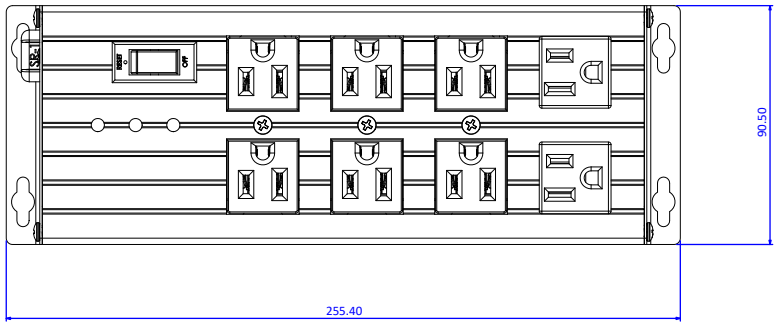

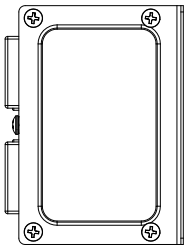

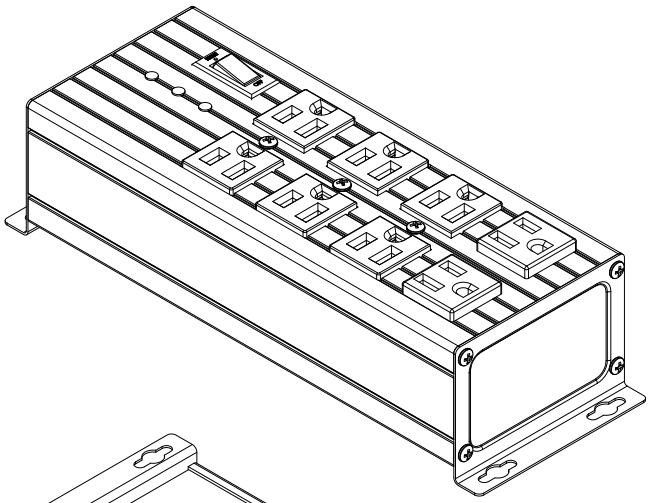

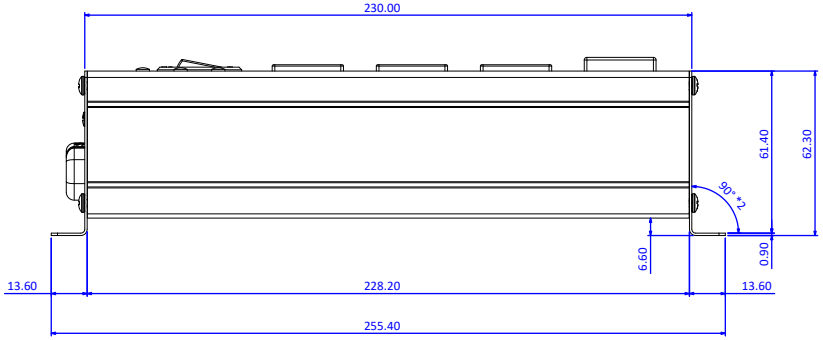

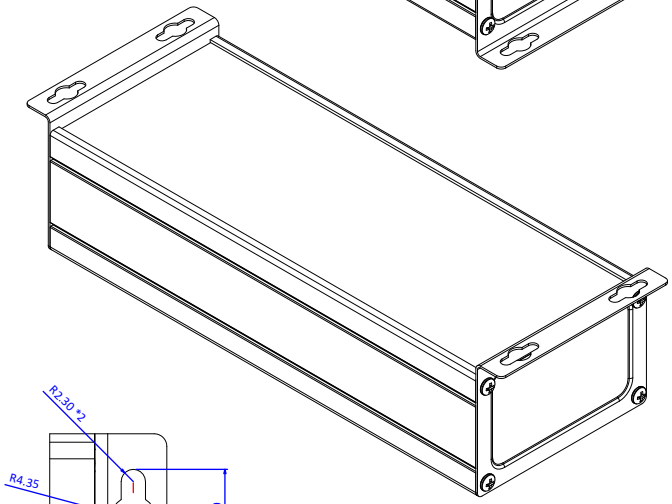

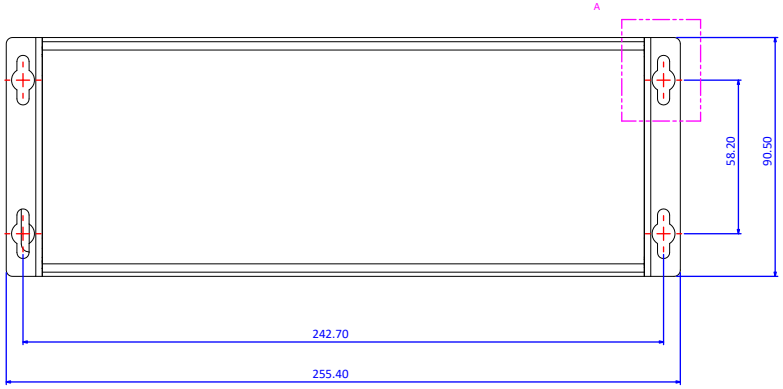

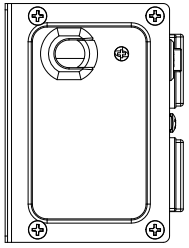

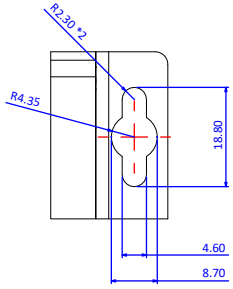

Details A
Scale 2 : 1

THIRD ANGLE PROJECTION

GENERAL NOTES

DIMENSIONS ARE IN MM - DO NOT SCALE

THIS DOCUMENT CONTAINS CONFIDENTIAL, PROPRIETARY INFORMATION THAT IS PROPERTY OF STARTECH.COM

StarTech.com

PRODUCT ID	8N515S12-POWER-STRIP
DESCRIPTION	8-Outlet Industrial Power Strip 125V/15A, EMI/RFI Isolation, Surge Protection, Mountable PDU, 12ft/3.6m Power Cord, NEMA 5-15P/R, UL Listed, TAA

DO NOT SCALE	**SHEET: 1 OF: 1**	**UPLOAD DATE: 8/14/2026**